Instruction Manual

ET30 Rolling garage door opener

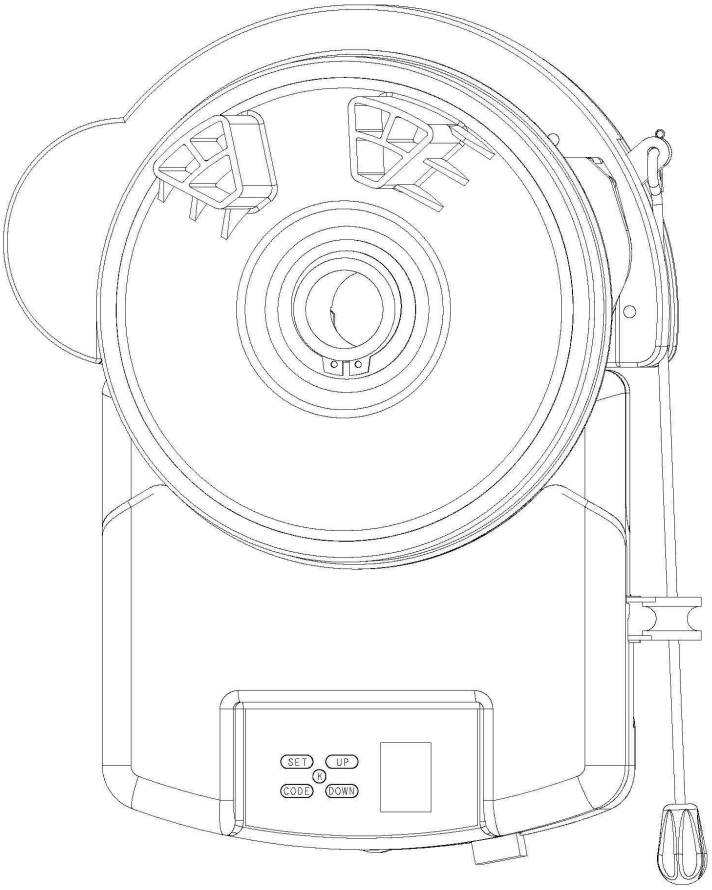

INSTALLATION INSTRUCTIONS | OWNERS COPY

WARNING: It is vital for the safety of persons to follow all instructions. Failure to comply with the installation instructions and the safety warnings may result in serious personal injury and/or property and opener damage. Please save these instructions for future reference.

TABLE OF CONTENTS

1. Safety warnings – Pages 4-5

2. Product Features – Page 6

3. Installation instructions – Pages 7-8

4. Setting and operating – Page 9-15

5. Packing list – Page 15

6. Technical data – Page 15

7. Common trouble shooting - Page 16-17

8. Final note - Page 18

9.Important information for the user - Page 18

1. SAFETY WARNINGS

Warning — It is vital for the safety of persons to follow all instructions. Failure to comply with the following safety rules may result in serious personal injury and/or property damage.

Do not operate the garage door operator unless the garage door is in full view and free from objects such as cars and children/people. Make sure that the door has finished moving before entering or leaving the garage.

Do not operate the garage door operator when children/persons are near the door. Children must be supervised near the garage door at all times when the door opener is in use. Serious personal injury and/or property damage can result from failure to follow this warning.

Do not allow children to operate the garage door operator. Serious personal injury and/or property damage can result from failure to follow this warning.

Regularly check to make sure that the safety obstruction force is working correctly, and is tested (by placing a 50mm high object on the floor) and set as per the installation instructions manual. Failure to follow the manual could result in serious personal injury and/or property damage. This test must be repeated at regular intervals and the necessary adjustments made as required.

Do not disengage the door opener to manual operation with children/persons or any other objects including motor vehicles within the doorway.

Wall switch or transmitter must be installed high enough and make sure children can’t reach them.
The door opener is not intended for use by young children or infirm persons without adequate supervision. Children should be supervised to ensure that they do not play with the remote transmitters or the operator.

Keep hands and loose clothing clear of the door and door opener at all times. If the roll up door is the only entrance to the garage, a back up battery must be installed and checked weekly.

The unit should be installed so that it is protected from the elements. It should not be exposed to water or rain. It is not to be immersed in water or sprayed directly by a hose or other water carrying device.

The garage door must be well balanced. Sticking or binding doors must be repaired by a qualified garage door installer prior to installation of the operator.

Frequently examine the installation, in particular cables, springs and mountings for signs of wear, damage or imbalance. Do not use the door if repair or adjustment is needed since a fault in the installation or an incorrectly balanced door may cause injury. Do not attempt to repair the door yourself as hardware is under extreme tension.

Remove or disengage all garage door locks and mechanisms prior to installation the operator.

Connect the garage door operator to a properly earthed general purpose 240V mains power outlet installed by a qualified electrical contractor. The outlet (and operator) must be positioned so that it is easily accessible.

Disconnect the power cord from mains power before making any repairs or removing covers. Only experienced service person can remove covers from garage door operator.

When using auto close mode, a photo electric beam must be fitted correctly and tested for operation at regular intervals. Extreme caution is recommended when using auto close mode. All safety rules must be followed.

In order for the garage door opener to sense an object obstructing under the door way, some force must be exerted on the object. As a result the object, door and/or person may suffer damage or injury.

If the circuit is damaged, it must be repaired by a qualified person.

Make sure that the door is fully open before driving in or out the garage and fully closed before leaving the driveway.

Make sure that remote controls are kept out of reach of children.

2. PRODUCT FEATURES

1. Easy to use. Just press the remote control button or the O/S/D button on the motor to open, stop or close the roller shutter.

2. Safe and reliable remote control system featuring rolling code, low coincident code rate.

3. Electronic travel limit switch, easy to operate, stable and reliable.

4. ISS (intelligent safety obstruction system). When performing a close cycle the door will automatically reverse if it hit an obstacle or is restricted in some manner. The door will also stop if it is restricted when opening.

5. Up to 20 different transmitters can be stored in the opener's memory.

6. Energy-efficient LED light. The light will automatically on when operating and automatically off 3 minutes later after finish operating.

7. Back up battery terminal available. (Back up battery optional)

8. Auto close mode available. The door will be closed automatically 1 minute after it is fully opened in default auto close setting.

NOTE: It is compulsory to install a photo electric beam if auto close mode is selected, otherwise the door may cause personal injury or damage to property. Auto close time is adjustable.

9. Photo beam terminal available.

10. Simple and reliable clutch. Pull down the manual release lever, the door can be manually operated. Push up the manual release lever, the door will return to auto mode again.

3. Installation instructions

IMPORTANT SAFETY INSTRUCTIONS FOR INSTALLATION

Warning：Incorrect installation can lead to severe injury. Follow this installation instruction.

SIDE ROOM REQUIREMENTS

Fig. 1 shows the minimum and recommended side room. The distance between the edge of the door curtain and the inside of the bracket must be at least 40mm. However, for easier access it is recommended that at least 95mm is allowed.

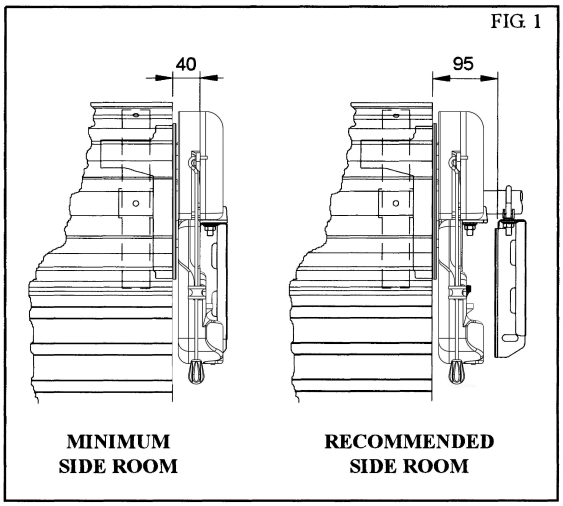

1. CHECK OPERATION OF DOOR

BEFORE BEGINNING THE INSTALLATION CHECK THE OPERATION OF THE DOOR

The door must be well balanced and be in a reasonable operating condition. The ideal operational effort in raising or lowering the door should not exceed a force of l0kg (22 lbs.). Make sure that all door locks, ropes, chains etc. are neither released, nor disabled and remove unnecessary accessories.

2. FIXING OF DOOR WEIGHT BAR (OPTIONAL)*

***Optional extra – not required for majority of installations**

Move the door manually to the mid open position. Place the weight bar on the bottom rail, in the middle of the door and secure with the fasteners provided (FIG. 2). Check the operation of the door again. If the door feels heavy it may require extra tension to be added to the door springs . Refer to the door Installation manual from the manufacturer on how to tension the door.

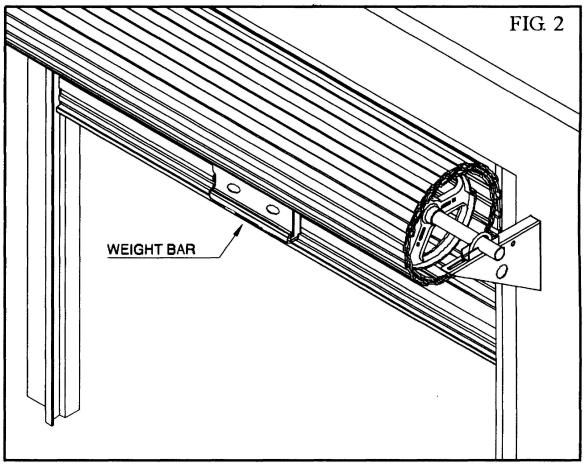

3. INSTALLING OPERATOR

The ET-30 roller door operator can be fixed to the roll up garage door in a variety of ways. Described below is one method of fixing. Make sure there is enough side room to slide the drive assembly onto shaft.

PLEASE NOTE：

THE INSTRUCTIONS FOR FIXING THE OPERATOR TO THE DOOR ARE FOR

RIGHT HAND INSTALLATIONS ONLY.

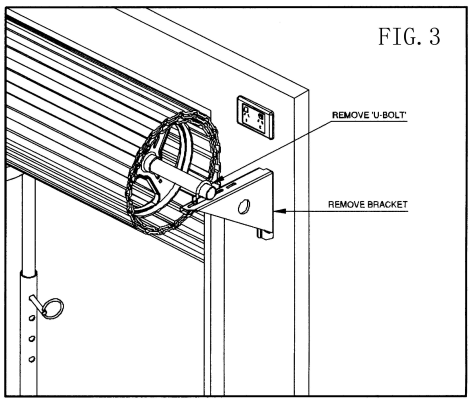

Installation process (FIG. 3, FIG. 4, and FIG. 5)

1. Check that the door shaft U bolt is securely tightened on the left hand side of the door.
2. Raise the door and tie a rope around the center to secure the roll.
3. Support the right hand end of the door with a suitable prop, e.g. step ladder and soft padding to protect door surface.

WARNING：DO NOT ALLOW CHILDREN/PERSONS AROUND THE DOOR AND PROP. SERIOUS PERSONAL INJURY AND/OR PROPERTY DAMAGE CAN RESULT FROM FAILURE TO FOLLOW THIS WARNING

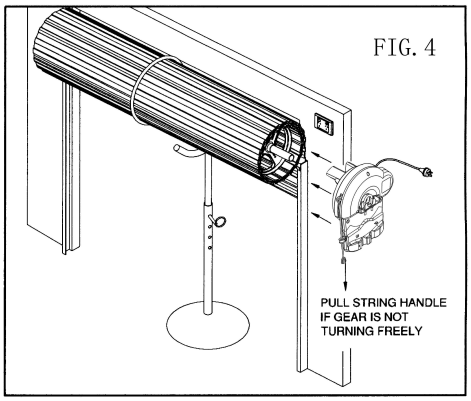

4. Carefully loosen and remove the right hand door shaft U-bolt.
5. Make sure that the door supporting prop is secure. While the door is supported remove the right hand door mounting bracket from wall.
6. Remove the drive assembly from the packaging. Try to rotate the drive gear by pushing on the fork (Fig. 6). If the gear does not rotate the manual mode has to be selected. To select pull downward the manual release lever. The drive gear should now rotate freely.
7. Slide the drive assembly over the door axle making sure that the fork extends into and over one of the spokes of the door drum wheel.
8. Refit the door mounting bracket to the wall. In some cases the bracket may have to be re-positioned. Re-fit and tighten the door shaft U-bolt. Remove door supporting prop and untie the rope from the curtain.
9. Straighten the drive assembly and position as per Fig. 5. Tighten the two locking bolts firmly to secure the operator.
10. Check the manual operation of the door by raising and lowering the door. The door should run smoothly.

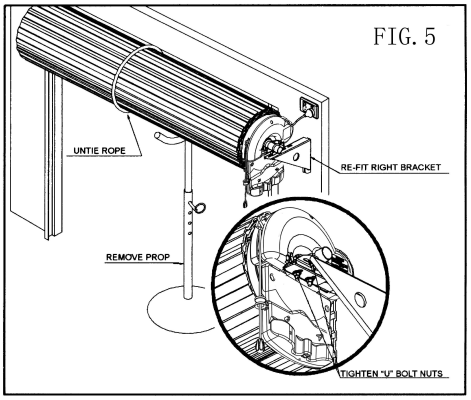

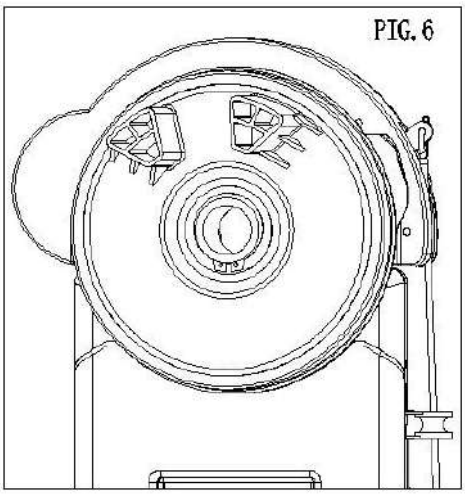

NOTE: After installation, ensure that parts do not extend over public footpaths or roads.

4. Setting and operating

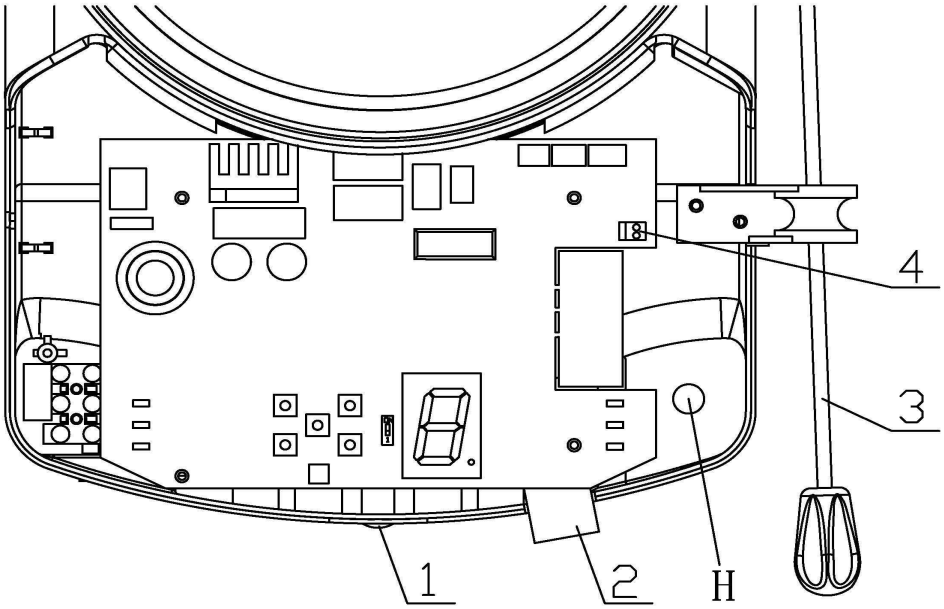

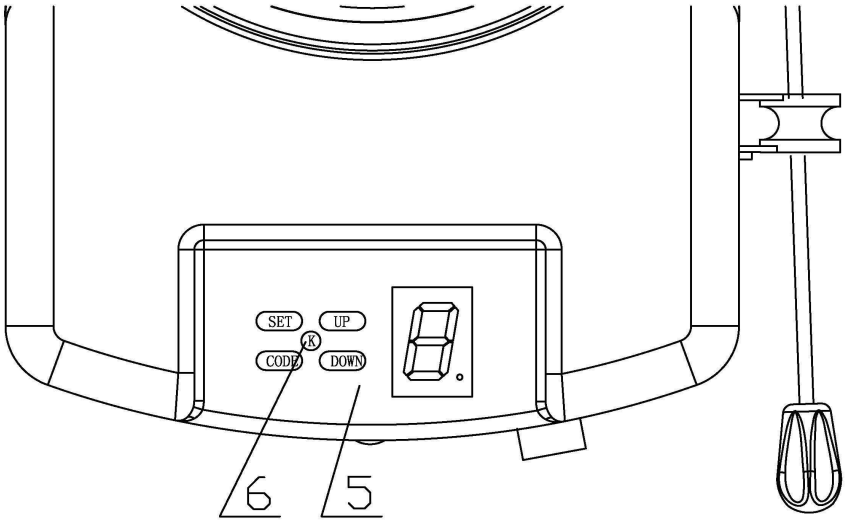

1. O/S/C button
2. PB/GND/PE/+24V terminal
3. Manual release lever
4. Battery backup terminal
5. Programming panel
6. K button(same function as O/S/C button)

H. Hole for battery backup connection

4.1 Left/right installation setting

WARNING：This step must be completed prior to setting travel limits (4.2) if utilizing a lift sided installation.

If utilizing the standard right sided installation this step can be ignored.

Press ‘SET’ button and hold on until LED displays figure ‘5’, press ‘UP’ or ‘DOWN’ button to choose ‘1’ left installation or ‘0’ right installation. Press ‘SET’ button to confirm the setting. The default setting is right hand installation.

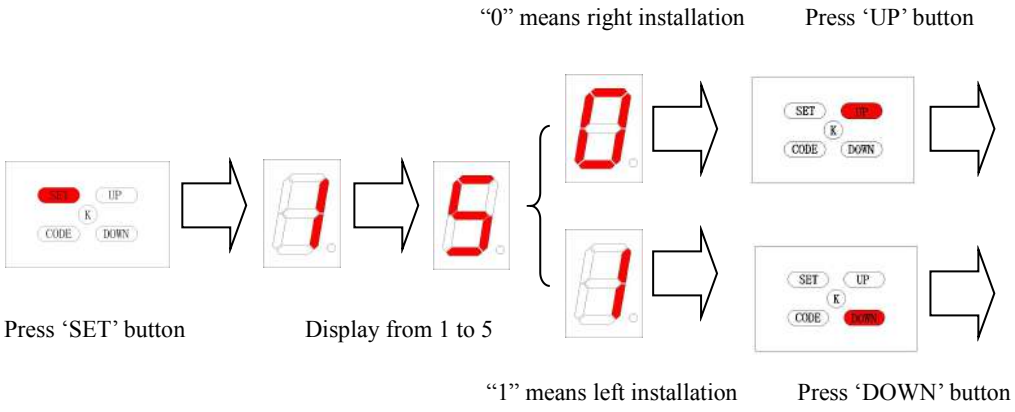

Turn into “1” (left installation)

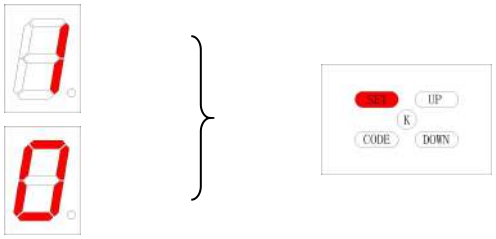

Turn into “0” (right installation) Press ‘SET’ button to confirm setting

Please follow all setup steps from start to finish on initial install to ensure correct functionality of your new garage door opener. Failure to do so may result in operational issues.

4.2 Door travel limit Setting

4.2.1 Pull down the manual release lever, the door operator is under manual mode.

4.2.2 ***Open the door by hand until the door touches the upper door stop. (see Fig.7)***
Close the door by hand until the door touches the ground . (see Fig.8)

4.2.3 Push up the manual release lever, the door operator is now under electric mode.

4.2.4 Press 'SET' button and hold on until LED displays figure '1' , then adjust the up limit by pressing the 'up' button. Fine-tune using 'up' or 'down' button to determine the final up limit position, then press 'SET' button to confirm. The display will now show a '2' automatically.
Adjust the down limit by pressing 'down' button. Fine-tuning 'up' or 'down' button to determine the final down limit position, then press 'SET' button.

The opener will operate a cycle automatically to remember the limit positions and the opening & closing force. If completed correctly, a 'half 11' will be displayed on the control panel indicating that the unit is in standby mode. If this does not occur then repeat the steps above.

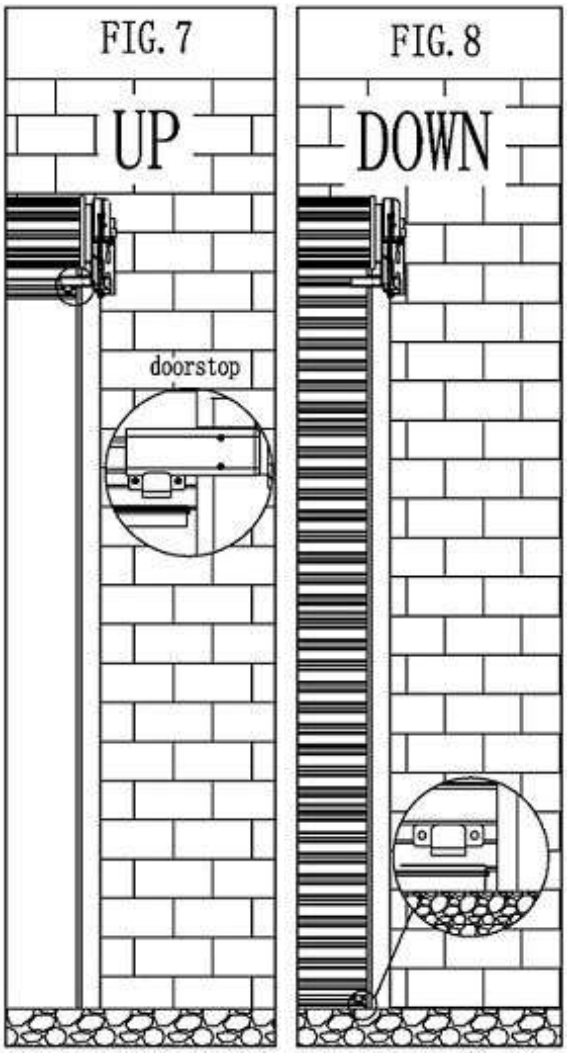

Setting processes：

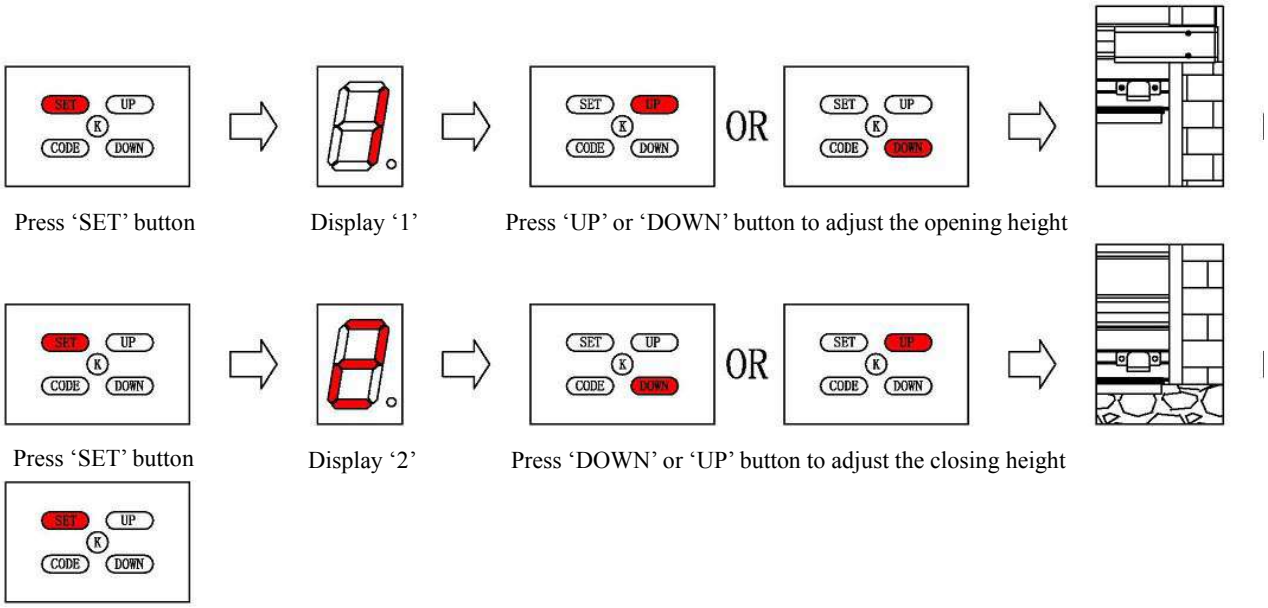

Press 'SET' button to confirm the setting

4.2.5 Press the RED O/S/C button at the bottom of door operator or K button (FIG.9), confirm the up limit and down limit are correct. If not, please re-set the travel limit according to above processes until the limits are correct.

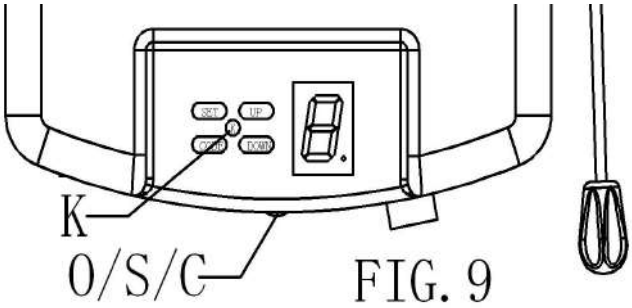

FIG. 9

4.3 CODING TRANSMITTER

4.3.1 The operator should be under standby mode when coding remotes. Press 'SET' button until the coding light turns on and the operator is under remote learning mode. Press any one button two times on the remote, the coding light will extinguish. The remote has been coded successfully. Use the same method to code multiple remotes. Up to 20 can be stored at any one time.

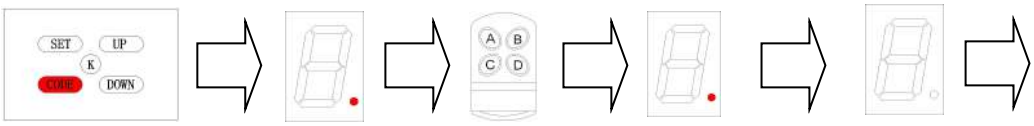

Press 'CODE' button | Red light turn on | Press any one button 2 times | Light flashes | Light turn off Coding finished

4.3.2 Deleting remotes：Press the code button over 8 seconds until display shows C, then it will be under standby mode. All stores remotes are now deleted.

Press 'CODE' button over 8 seconds | Display C | Under standby mode

4.4 Safety reverse force adjustment

4.4.1 Press ‘SET’ button and hold on until the LED displays figure ’3’. Press ‘UP’ button to increase the force, Press ‘DOWN’ button to decrease the force. The maximum force is 9, the minimum force is 1. The default is 3.

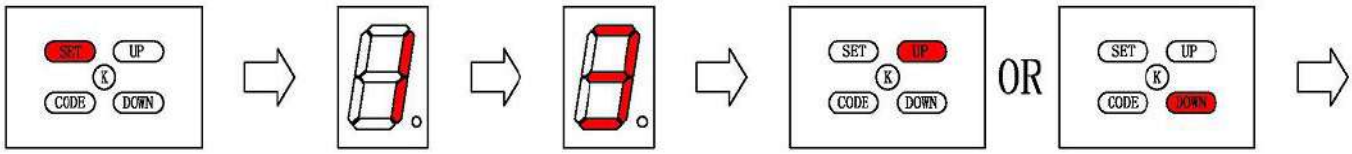

Press ‘SET’ button

Display from ‘1’ to ‘3’

Press ‘UP’ or ‘DOWN’ button to adjust the force

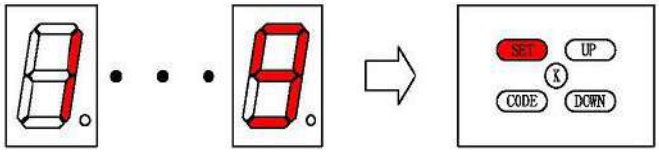

The force from 1 to 9

Min force is 1, max force is 9

Press ‘SET’ to confirm

4.5 Connecting the photocells (OPTIONAL)*

***The photo beam is an optional unit available as a special order.**

4.5.1 The GND、PE、+24V connections of the terminal block (green) at the bottom of the door operator are for photocells, Please refer the Fig.10. Please choose switch value style(NC) photocell.

Notice: Close the photo beam function when not utilizing the photo beam sensor.

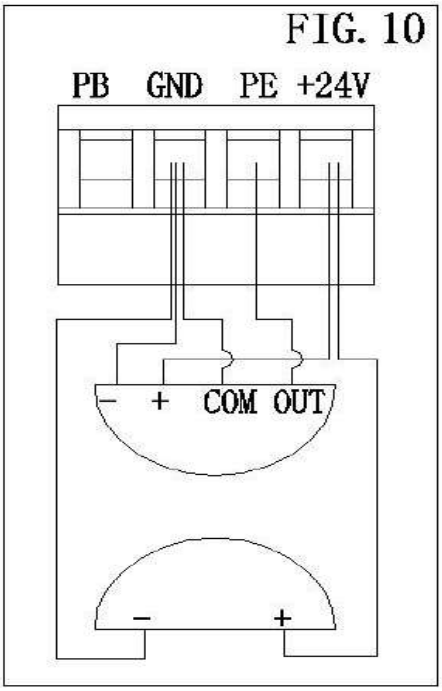

4.5.2 Activating the photocell function:

Press ‘DOWN’ button and hold on until the LED displays’11’, press ‘UP’ button the LED displays ‘H’, photocell function is available, press ‘SET’ to confirm.

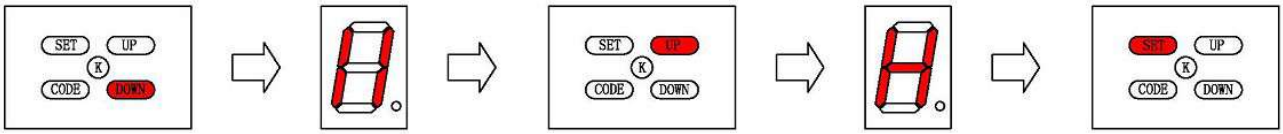

Press ‘DOWN’ button

Display ‘11’

Press ‘UP’ button

Display ‘H’

Press ‘SET’ to confirm

Please confirm the photocells are well connection and programmed. Please check if the door will be automatically reversed when encountering an obstacle during door closing.

4.5.3 Canceling the photocell function:

Press ‘DOWN’ button and hold on until the LED displays ‘H’ , press ‘DOWN’ button the LED displays 11’, to cancel this function, press ‘SET’ to confirm. The default is close for this function.

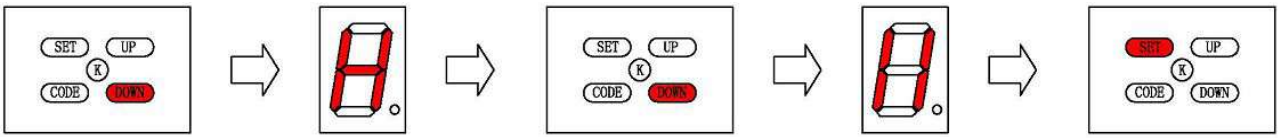

Press ‘DOWN’ button Display ‘H’ Press ‘DOWN’ button Display ‘11’ Press ‘SET’ to confirm

WARNING: Close the photo beam function when not utilizing photo beam sensor.

4.6 Auto close setting:

Press ‘UP’ button and hold on until the LED displays ‘-’. Press ‘up’ button once, the auto-close time will increase by 1 minute, the maximum time is 9 minutes. Press ‘down’ button the auto-close time decrease by 1 minute. The auto-close function will be turned off when LED displays 0. Press ‘SET’ button to confirm.

The default setting for this function is 0 (off).

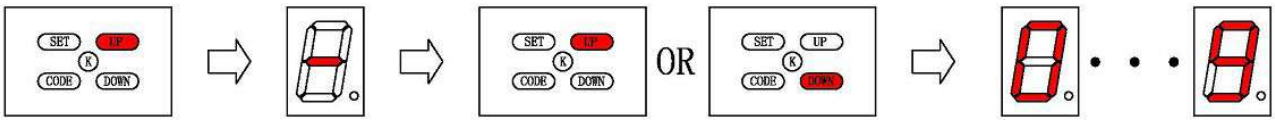

Press ‘UP’ button Display ‘-’ Press ‘UP’ or ‘DOWN’ button to choose the close time The minute from 1 to 9

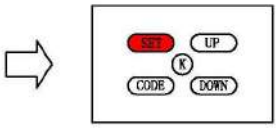

Press ‘SET’ to confirm

NOTE：The auto close is only available when door is at its full open position.
When using auto close mode, a photo electric beam must be fitted correctly and tested for operation at regular intervals.

4.7 Battery backup connection:

It must use 24V DC 3.5Ah sealed lead acid battery. Please open the light cover to connect the wires of battery with the battery backup terminal in the control board(Fig.12). The ‘H’ of Fig.11 is a hole for battery connection wires to through.

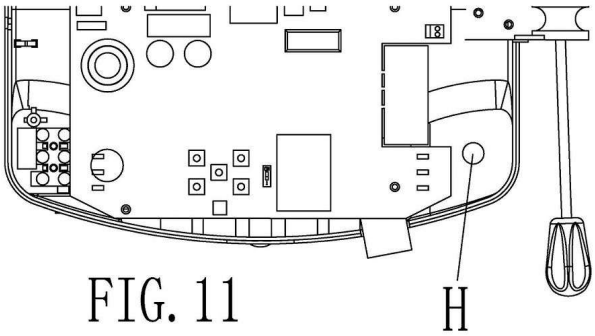

FIG. 11

FIG. 12

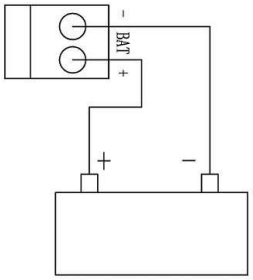

5. Packing list

Item	Quantity
ET-30 roller door operator	1
Remote	2
U-clamp and cast iron	1
Extended fork	2
Extended release arm	1
Installation manual	1
Weight bar (optional)	2

6. TECHNICAL DATA

Input voltage: 220 V AC——240 V AC 50 HZ

Controller voltage: 24 V DC

Max power: 235W

Lifting force: 400N(40kgs)

Working circumstance: -20℃——+40℃

Operator limits travel: 4 circles of door drum wheel

Receiver type: 433.92 MHZ ASK rolling code

The Max height of door : 4.5m

7. COMMON TROUBLE SHOOTING

Symptom	Possible reason	Solution
The door does not move The door is locked or motor jammed	Main power not switch on	Switch on the main power
	The door is obstructed	Remove the barrier
		Unlock the door
		Check the motor is turning
The door won't reverse when obstructed	The moving force of the motor is set too high	Decrease the safety reverse force
The door reverses automatically when closing	The moving force of the motor is set too low	Increase the safety reverse force
	There could be an obstruction under the door	Remove obstruction
The door stops automatically when opening	The moving force of the motor is set too low	Increase the safety reverse force
The operator can be controlled by O/S/C button but not the remote	The remote light doesn't flash	The battery is loose. Open rear cover and ensure batttery is connected.
	The receiving antenna is not pulled out	Pull out the receiving antenna
	Low battery in remote	Change new battery（12V）

The door can't fully close	The door is beyond the original up limit setting after power failure	Reset the limit position as per instruction
A noise emits from the motor during the first manual travel limit setting	The up/down limit position confirmation	This is normal, no action required
The door can only open, cannot close	The photocell function was activated	Close the photocell function
The motor rotates but the door doesn't move	Motor put into manual mode	Push the manual release lever up
The door closes when pressing 'UP' during limit setting	Left / right installation error	Chang the installation direction according to left/right installation setting in the instruction manual
2 short beeps from buzzer means 24V DC Motor out of work	The connector of motor break away the control board	Please make sure well connection between motor connector and control board.
	Motor fault	Please change a new motor
3 short beeps from buzzer means over-load protection	The door has met an obstacle	Remove the obstacle
	Door twisted	Fix the door
4 short beeps from buzzer means potentiometer out of work	The connector of potentiometer break away the control board	Please make sure well connection between motor connector and control board.
	Potentiometer	Please change a new potentiometer

Final notes

This manual is only used by those who are qualified to carry out the installation.
No given information in this manual can be considered of any interest to the end user. It is important for the installer to show their clients correct operation using of the opener including the using of manual disengagement cord. Inform the owner about the need of a regular and accurate maintenance, especially regarding a regular check of the safety and reversing devices.

Important information for the user

Once the opener has been installed, the user must be informed about how it works and all the risks that can arise if it is used improperly. The user must avoid placing himself/herself in dangerous situations such as standing within the door's operating range when it is moving.

Do not let children play near the door, and keep the remote controls out of their reach.
All services, repairs or checks must be carried out by professionally qualified persons, and noted on a maintenance register kept by the user.

IMPORTANT NOTE: In the case of a malfunction the user must call an authorized installer and should not attempt to repair it by yourself.